| REV. | ECN NO. | LOCTIONS. | DESCRIPTION | DATE | CHANGER |
|---|---|---|---|---|---|
| A | | | | 08-19-13 | |

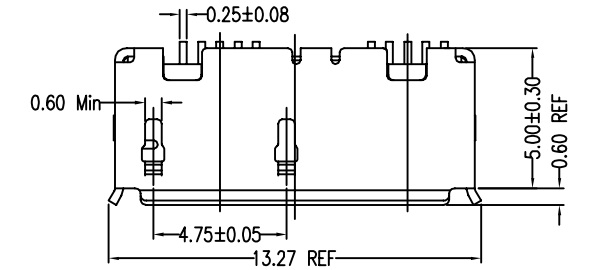


| Pin Number | Signal Name |
|---|---|
| 1 | VBUS |
| 2 | D- |
| 3 | D+ |
| 4 | ID |
| 5 | GND |
| 6 | MicB_SSTX- |
| 7 | MicB_SSTX+ |
| 8 | GND_DRAIN |
| 9 | MicB_SSRX- |
| 10 | MicB_SSRX+ |

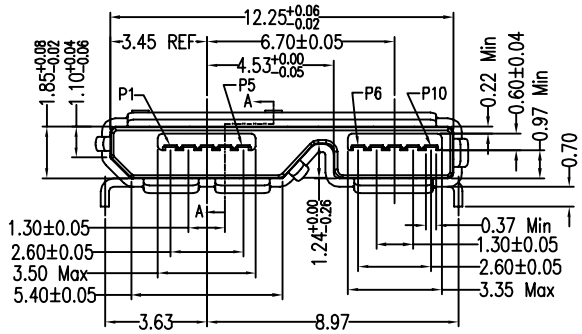


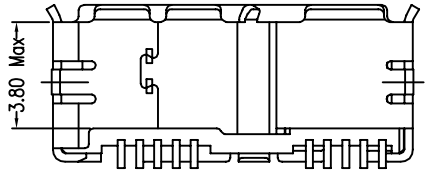


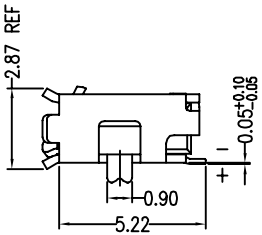


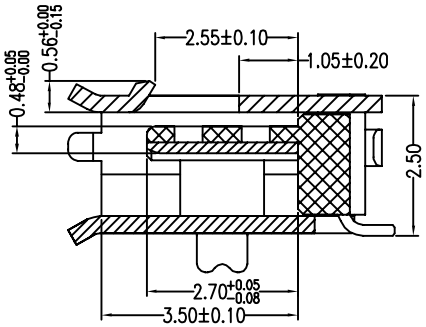


SECTION: A-A
SCALE: 2:1

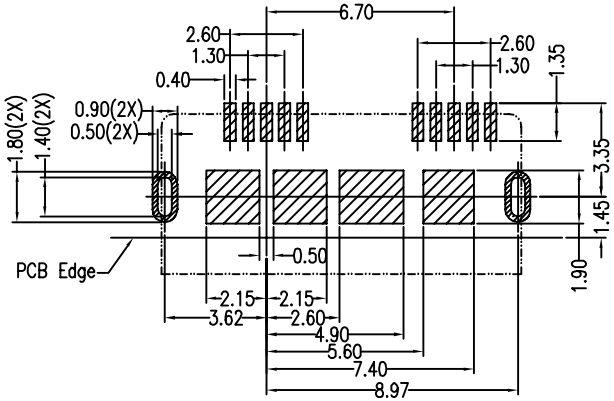


RECOMMENDED PCB LAYOUT
COMPONENT SIDE(Tol:±0.05)

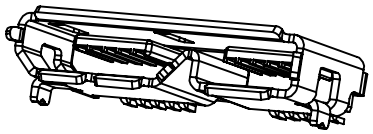

## NOTES:

1. Material:
   Housing: LCP+50%GF, UL 94V-0 Rated;
   Color: Black.
   Plating: Gold Plating over Nickel(40~80u") on Contact Area;
   Gold(Flash) Plating on Solder Tail.
   Shell: Stainless Steel.
   Plating: Nickel(40~80u") Plating.
2. Mechanical:
   Insertion Force: 35N Max.
   Withdrawal Force: 8N Min.
   Durability: 10,000 Cycles Min.
3. Electrical Specification:
   Current Rating: 1.8A(Only Pin1,5); 0.25A For Other Pin.
   Contact Resistance: 50mΩ Max.
   Insulation Resistance: 100MΩ Min.
   Dielectric Withstanding Voltage: 100V AC Min.
4. Environmental:
   Operating Temperature: -40°C to +85°C

## Ordering information

T-D M U X R 0 6 T P-3 B

- B: B TYPE
- 3: USB 3.0
- P: TRAY
- T: CONTACT PLATING T:TIN,Brass 30U"
- 6: LCP BLACK
- 0: other
- R: SMT 90°
- X: 10PIN

| | | | |
|---|---|---|---|
| TOLERANCE UNSPECIFIED: X. ±0.50; X.X ±0.25; X.XX ±0.15; X.XXX ±0.05; X.° ±2°; X.X° ±1° | DISNT 得升電子股份有限公司 DISNT MECHANICAL ELECTRONIC CO.,LTD | | |
| | DRAWED BY: 杨熊 | DATE: 8-19-13 | TITLE: 成品規格圖 |
| | | | PART NAME: USB 3.0 Micro B Type Receptacle, Shielding DIP |
| PROJECTION: | CHECKED BY: 何智权 | DATE: 8-19-13 | PART NO. T-DMUXR06TP-3B |
| | | | MOLD NO. |
| UNIT: mm [inch] | APPROVED BY: 陈宗渊 | DATE: 8-19-13 | DRAW NO. T-DMUXR06TP-3B |
| SCALE:1:1 SIZE: A4 | | | SHEET 1 OF 1 |